LSTAT-8xy Room Control Unit

Installation instructions

Instructions de montage

Montageanweisung

Montagevoorschrift

Instruzioni di montaggio

Instrucciones de montaje

Monteringsanvisning

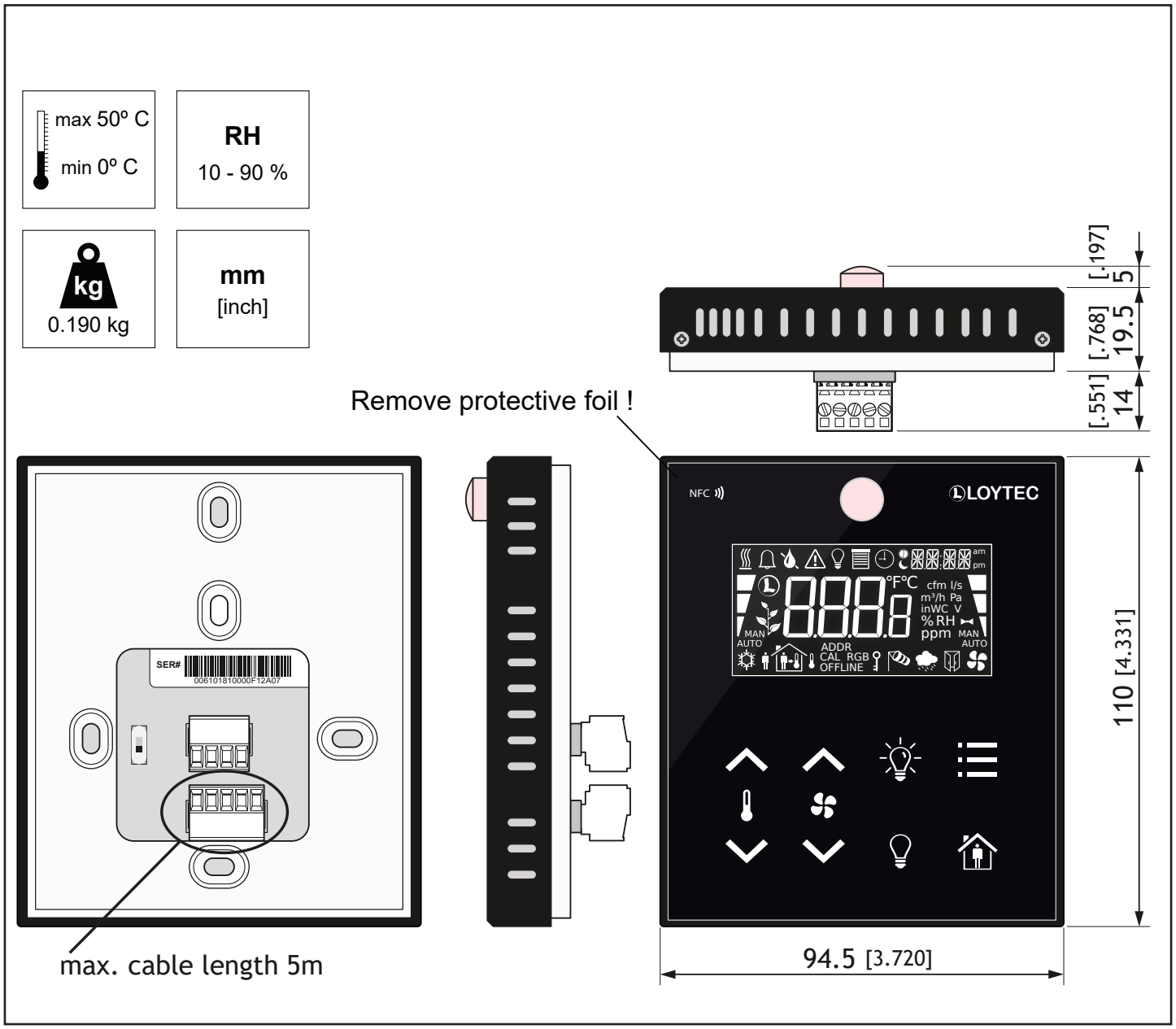

LOYTEC
A Delta Group Company

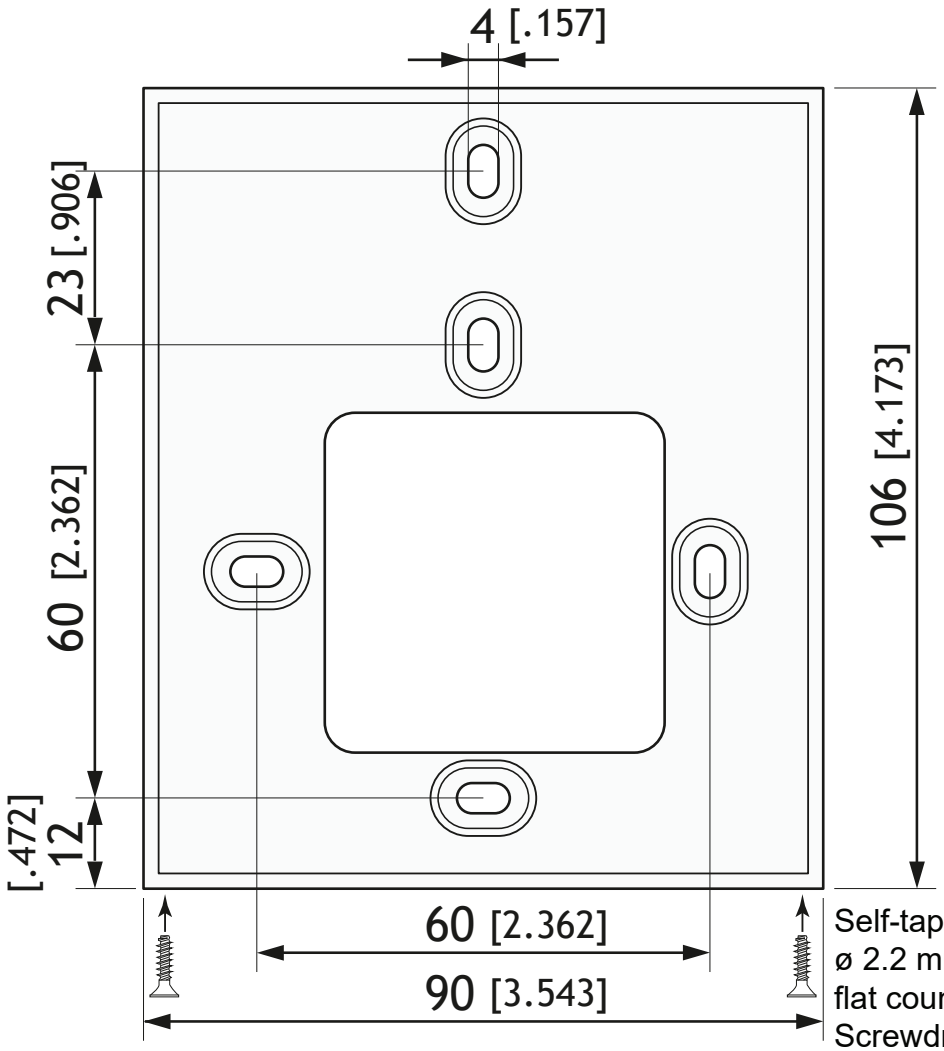

Self-tapping screw for thermoplastics
ø 2.2 mm, length: 6 mm,
flat countersunk head ø 3.8 mm
Screwdrive Phillips H

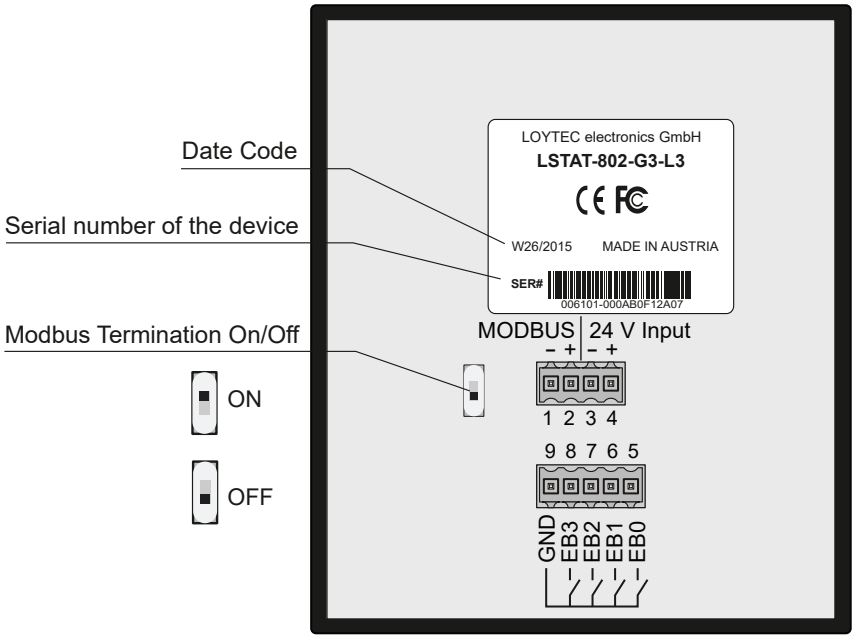

Connectors		
Modbus	1 2	– +
INPUT 24 V Power Supply	3 4	GND* + 24V DC
External Buttons (connect to GND)	5 6 7 8 9	EB0 EB1 EB2 EB3 GND

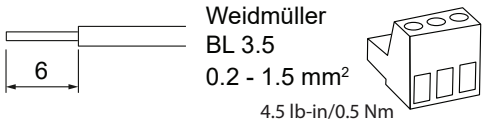

4 poles: Weidmüller BL 3.50/04/180 SN OR BX
5 poles: Weidmüller BL 3.50/05/180 SN OR BX

For max. MODBUS/24V cable length see user manual!

*** Terminal 3 (GND) must be connected to RS-485 GND on Controller!**

Document 88083801
01/2016
Printed in Austria
Data is subject to change

LOYTEC
A Delta Group Company
http://www.loytec.com
support@loytec.com